Dimensions

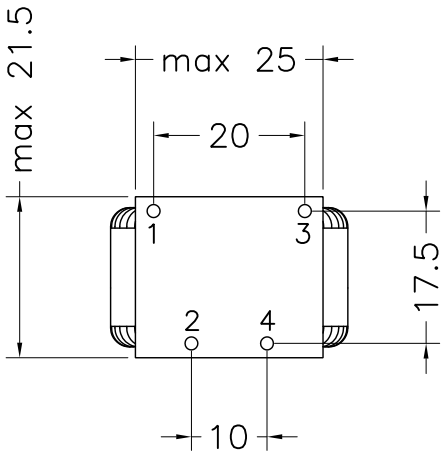

Electrical diagram

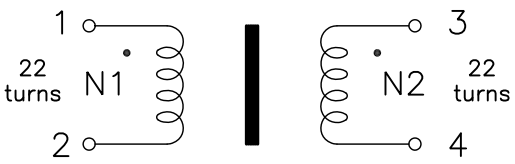



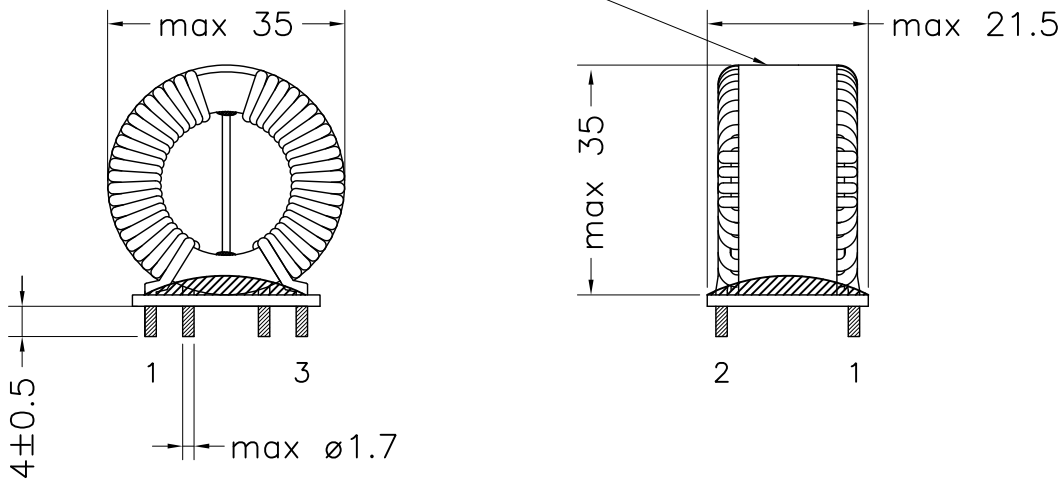

Dimensions in millimeters

2011/65/UE (RoHS–2) compliant

Electrical features

Inductance 1–2=3–4 @ 10kHz 100mV	6.34mH ±35%
Ring Core	Epcos – B64290L647X38
Copper Wire Ø1.50mm, Grade 1	Thermal Class 155°C

REV	APPR DATE	RIF. MOD.	DESCRIPTION OF MODIFICATION	EMITTED	CHECK AND APPROVAL
01	21.08.18		Release	A. Ridolfi	D. Di Giorgio

DESCRIPTION: **Common mode choke – MG10000842**

Mod. AQ 05.10

DOCUMENT TYPE	CODE	REVISION	RELASE DATE	PAGE
S.T.	8024.3002.047	01	21.08.18	1of1